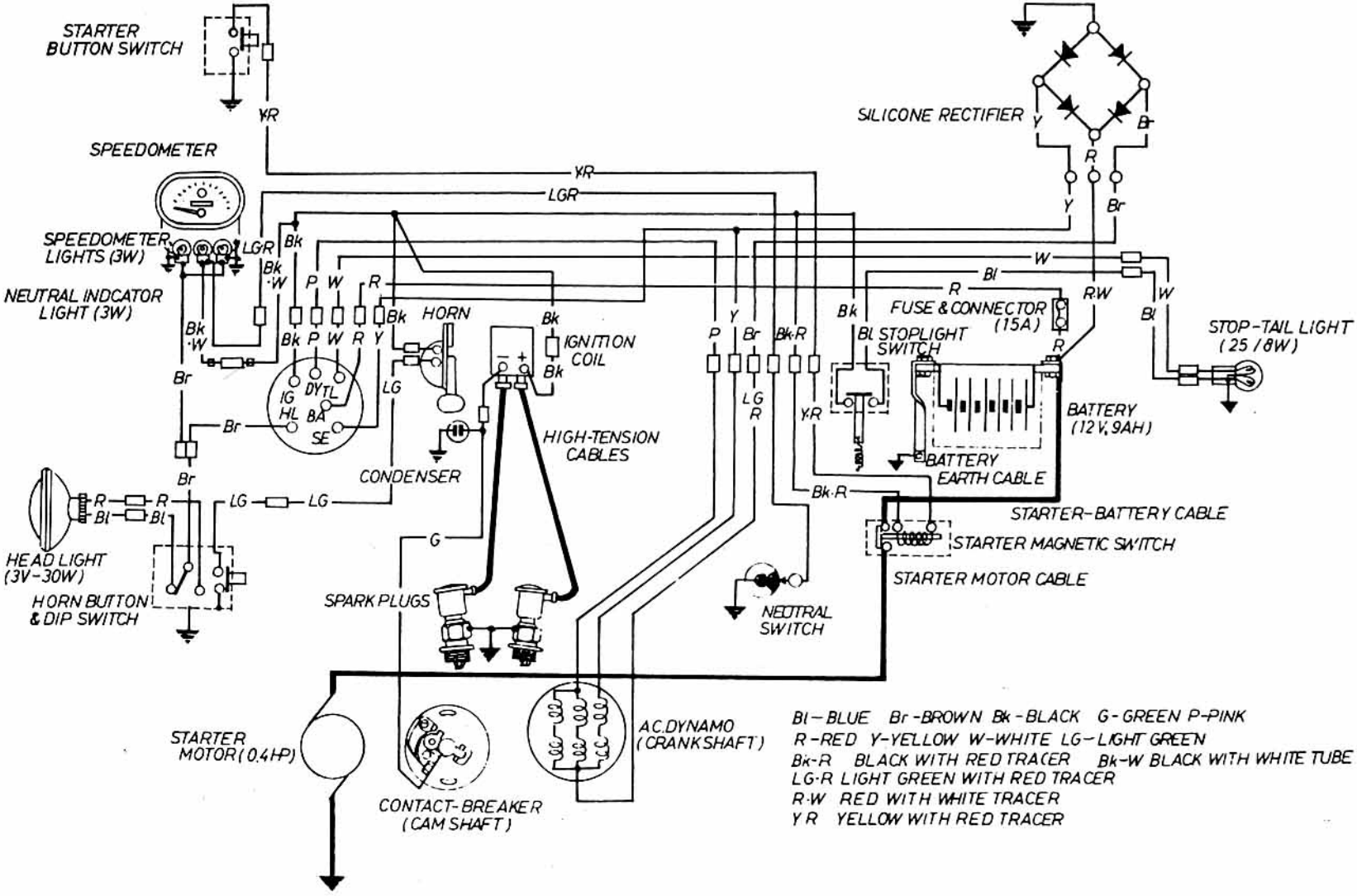
STARTER BUTTON SWITCH
SPEEDOMETER
SPEEDOMETER LIGHTS (3W)
NEUTRAL INDCATOR LIGHT (3W)
HEAD LIGHT (3V-30W)
HORN BUTTON & DIP SWITCH
HORN
IGNITION COIL
CONDENSER
HIGH-TENSION CABLES
SPARK PLUGS
STARTER MOTOR (0.4HP)
CONTACT-BREAKER (CAM SHAFT)
A.C.DYNAMO (CRANKSHAFT)
SILICONE RECTIFIER
FUSE & CONNECTOR (15A)
STOPLIGHT SWITCH
BATTERY (12V, 9AH)
BATTERY EARTH CABLE
STARTER-BATTERY CABLE
STARTER MAGNETIC SWITCH
STARTER MOTOR CABLE
NEUTRAL SWITCH
STOP-TAIL LIGHT (25/8W)
Bl-BLUE Br-BROWN Bk-BLACK G-GREEN P-PINK
R-RED Y-YELLOW W-WHITE LG-LIGHT GREEN
Bk-R BLACK WITH RED TRACER Bk-W BLACK WITH WHITE TUBE
LG-R LIGHT GREEN WITH RED TRACER
R-W RED WITH WHITE TRACER
Y R YELLOW WITH RED TRACER